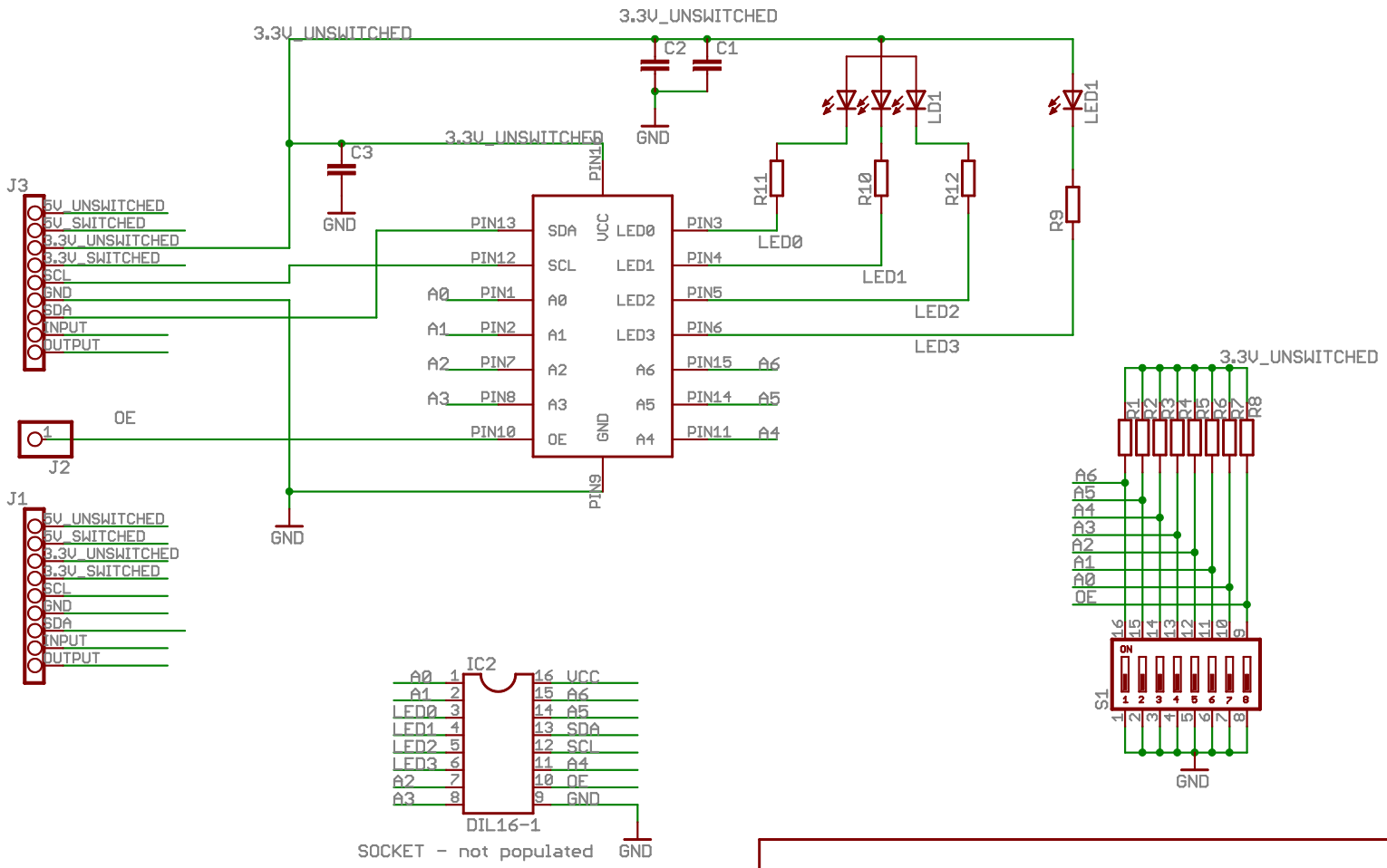

TITLE: PCA9633 daughtercard

Document Number:

REV: 1.0

Date: 8/15/2007 11:14:54a

Sheet: 1/1